SMD High Current Power Inductor - HI0530 Series

Meisongbei

Features

- 5.2mmx5.5mmx2.8mm Shielded
- Inductance Range: 0.68uH - 10uH
- Current Range: 3A - 14A
- Frequency range up to 1MHz

Application

- PDA, notebook, desktop, and server applications.
- Low profile, high current power supplies
- Battery powered devices
- DC/DC converters in distributed power systems

General Specifications

- Storage temp range: -55°C to +125°C
- Operating temp range: -55°C to +125°C
- Resistance to Soldering Heat +260°C for 5-10 Sec.

Dimensions & Configurations (Unit:mm)

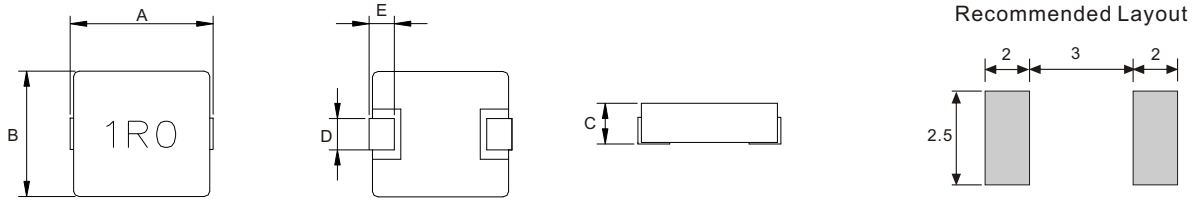

Type	A	B	C	D	E
HI0530	5.5±0.3	5.2±0.3	3.0Max	2.3±0.3	1.2±0.3

Electrical Characteristics For HI0530 Series

Part Number	Inductance L0 [uH] (±20%) @0A	DCR [mΩ]		Heat Rating Current (Irms) [A] (Max.)	Saturation Current (Isat) [A] (Max.)
		(Typ.)	(Max.)		
HI0530-R68M	0.68	11.0	12.0	8.5	14.0
HI0530-1R0M	1	13.0	14.0	7.0	11.0
HI0530-1R2M	1.2	15.0	16.0	6.5	11.0
HI0530-1R5M	1.5	20.0	25.0	6.0	10.0
HI0530-2R2M	2.2	29.0	35.0	5.5	9.0
HI0530-3R3M	3.3	32.0	38.0	5.0	7.0
HI0530-4R7M	4.7	50.0	60.0	3.0	5.0
HI0530-6R8M	6.8	91.0	108.0	2.5	4.0
HI0530-100M	10	115.0	150.0	1.5	3.0

- Inductance tested at 100kHz, 1.0Vrms, 0.0Adc
- Heat Rating Current (Irms): Current that cause the temperature 40°C rise from 25°C
- Saturation Current (Isat): DC current at which the inductance drops 30% from its value without current

Tape & Reel Specifications:

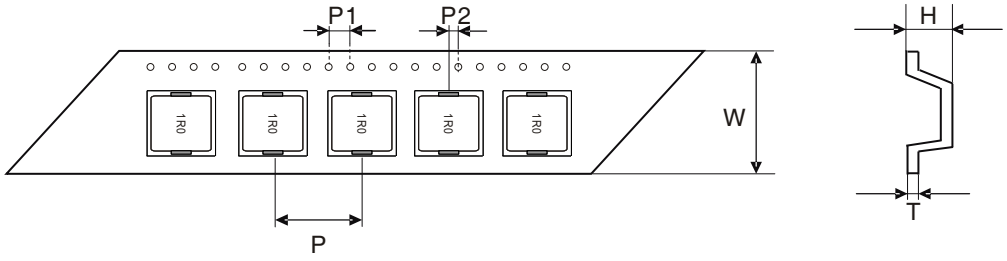

Unit: mm

Type	Dimension	W	P	P1	P2	H	T
	Tolerance	±0.3	±0.1	±0.1	±0.1	±0.15	±0.05
HI0530		16.0	12.0	4.00	2.00	3.20	0.40

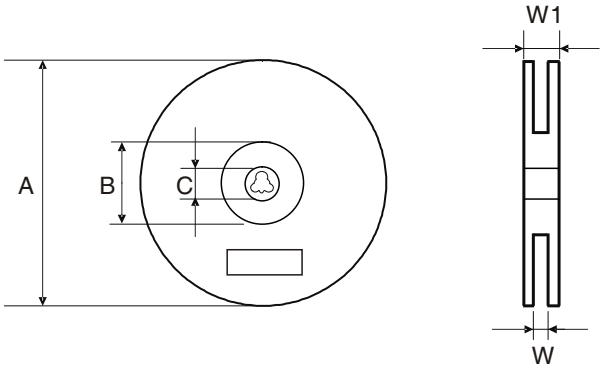

Unit: mm

Type	Dimension	QTY Per Reel	A	B	C	W	W1
	Tolerance	Pcs	±2.0	min	±0.5	±0.5	±3.0
HI0530		1500	330	100	13.5	16.4	22.4