Trans-inductor regulator power inductor - MLR110611

MEISONGBEI



Features

- Ferrite core material
- Dual winding
- Low DCR TLVR Inductor

Applications

- Multi-phase and Vcore regulators
- Server and desktop, CPU, GPU
- Data networking and storage systems

General Specifications

- Storage temp range: -40°C to +125°C
- Operating temp range: -40°C to +125°C
- Moisture Sensitivity Level(MSL): 1

RoHS COMPLIANT | REACH COMPLIANT | Halogen Free

Dimensions & Configurations (Unit:mm)

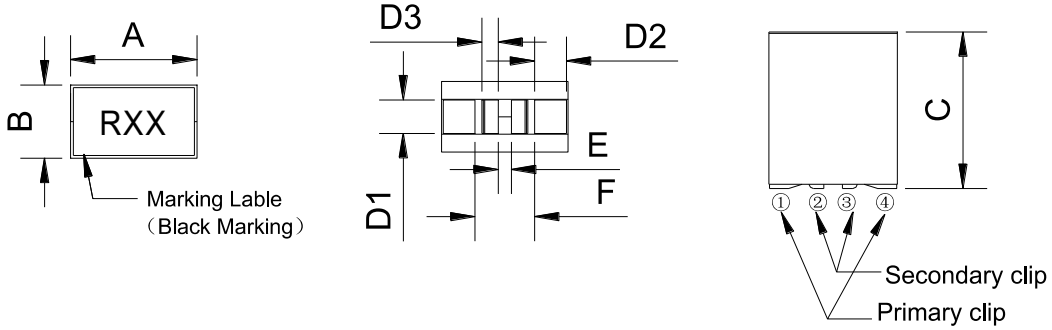

Type	A	B	C	D1	D2	D3	E	F
MLR110611	11.7 ± 0.3	5.7 ± 0.3	11.0 ± 0.3	2.5 ± 0.5	1.3 ± 0.3	1.15 ± 0.3	1.5 typ	8.8 typ

Recommended Pad Layout

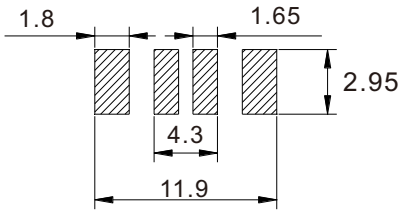

Schematic

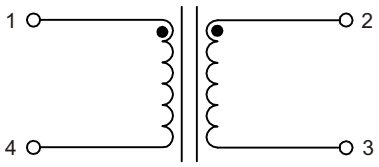

Electrical Characteristics @25°C, 100kHz,1V

Part Number	L [nH] 1-4/2-3	Li [nH] 1-4	DCR [mΩ] ±10%		Isat [A]			Irms [A]	
			1-4	2-3	25°C	100°C	125°C	1-4	2-3
MLR110611-R10L	105 ±15%	71.4	0.125	0.37	125	106	98	77	45
MLR110611-R12L	120 ±15%	81.6	0.125	0.37	102	87	80	77	45
MLR110611-R15L	150 ±15%	102.0	0.125	0.37	84	71	58	77	45
MLR110611-R17L	170 ±15%	115.6	0.125	0.37	70	60	53	77	45
MLR110611-R20L	200 ±15%	136.0	0.125	0.37	58	50	43	77	45

- Isat is the DC current which causes the inductance drop to Li.
- Irms is the DC current which causes the surface temperature of the part increase approximately 40°C