Trans-inductor regulator power inductor - MLR120612

MEISONGBEI



Features

- Ferrite core material
- Dual winding
- Low DCR TLVR Inductor

Applications

- Multi-phase and Vcore regulators
- Server and desktop, CPU, GPU
- Data networking and storage systems

General Specifications

- Storage temp range: -40°C to +125°C
- Operating temp range: -40°C to +125°C
- Moisture Sensitivity Level(MSL): 1

RoHS COMPLIANT | REACH COMPLIANT | Halogen Free

Dimensions & Configurations (Unit:mm)

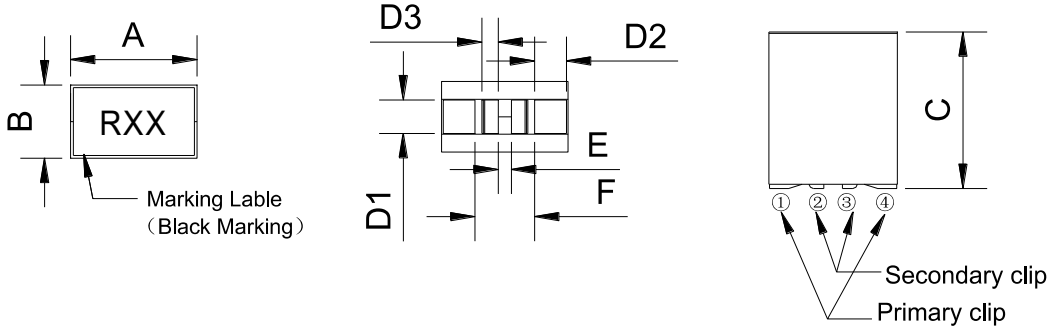

Type	A	B	C	D1	D2	D3	E	F
MLR120612	12.0 Max	6.0 Max	12.0 Max	2.5 ± 0.5	3.1 ± 0.5	1.1 typ	1.4 typ	5.3 typ

Recommended Pad Layout

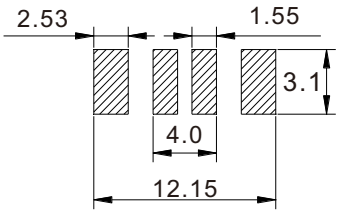

Schematic

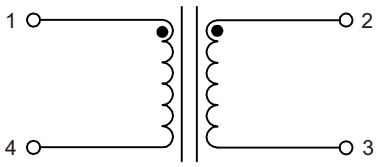

Electrical Characteristics @25°C, 100kHz,1V

Part Number	Inductance [nH] 1-4/2-3	Tolerance	DCR [mΩ] ±10%		Isat [A]		Irms [A]	
			1-4	2-3	25°C	100°C	1-4	2-3
MLR120612-R10L	100.0	±15%	0.125	0.45	125	105	70	40
MLR120612-R12L	120.0	±15%	0.125	0.45	100	90	70	40
MLR120612-R15L	150.0	±15%	0.125	0.45	80	70	70	40
MLR120612-R17L	170.0	±15%	0.125	0.45	70	55	70	40

- Isat is the DC current which causes the inductance drop to Li.
- Irms is the DC current which causes the surface temperature of the part increase approximately 40°C