Trans-inductor regulator power inductor - MLR966411

MEISONGBEI



Features

- Ferrite core material
- Dual winding
- Low DCR TLVR Inductor

Applications

- Multi-phase and Vcore regulators
- Server and desktop, CPU, GPU
- Data networking and storage systems

General Specifications

- Storage temp range: -40°C to +125°C
- Operating temp range: -40°C to +125°C
- Moisture Sensitivity Level(MSL): 1

RoHS COMPLIANT | REACH COMPLIANT | Halogen Free

Dimensions & Configurations (Unit:mm)

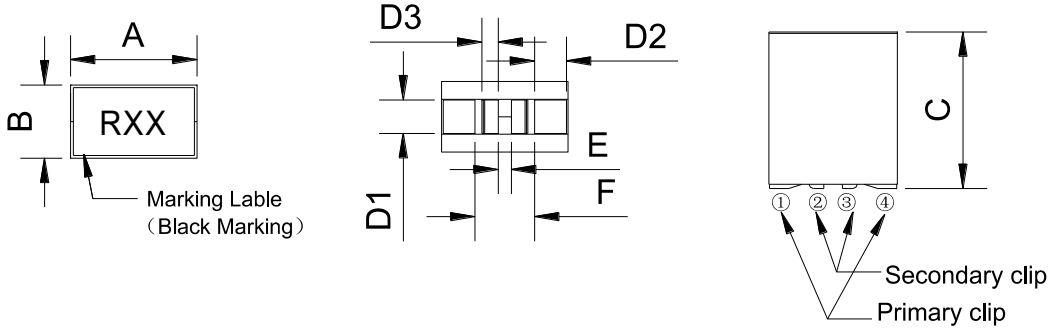

Type	A	B	C	D1	D2	D3	E	F
MLR966411	9.6 max	6.4 max	10.5 max	3.2 ± 0.3	2.1 ± 0.3	1.1 ± 0.3	1.8 typ	4.8 typ

Recommended Pad Layout

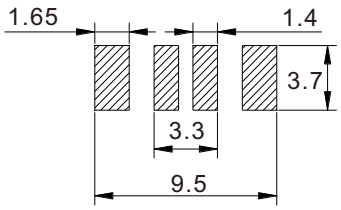

Schematic

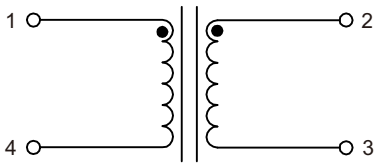

Electrical Characteristics @25°C, 100kHz,1V

Part Number	L [nH] 1-4/2-3	Li [nH] 1-4	DCR [mΩ] ±10%		Isat [A]			Irms [A]	
			1-4	2-3	25°C	100°C	125°C	1-4	2-3
MLR966411-R10L	100 ±15%	64	0.125	0.33	98	83	78	75	40
MLR966411-R12L	120 ±15%	77	0.125	0.33	79	67	63	75	40
MLR966411-R15L	150 ±15%	96	0.125	0.33	62	53	49	75	40
MLR966411-R18L	180 ±15%	115	0.125	0.33	54	46	43	75	40
MLR966411-R22L	220 ±15%	140	0.125	0.33	50	-	-	75	40

- Isat is the DC current which causes the inductance drop to Li.
- Irms is the DC current which causes the surface temperature of the part increase approximately 40°C